OptiGun GA03 Replacement Parts Order Form

Springer Industrial
3164 N Colorado St
Chandler, AZ 85225
Phone: 480-898-3144
Fax: 480-898-3192
Orders@springerind.com

Gema Official Distributor

Ship To Location:

Company: _____

Address: _____

_____

_____

Contact: _____

Email: _____

Phone: _____

PO #: _____

QTY	PART NUMBER

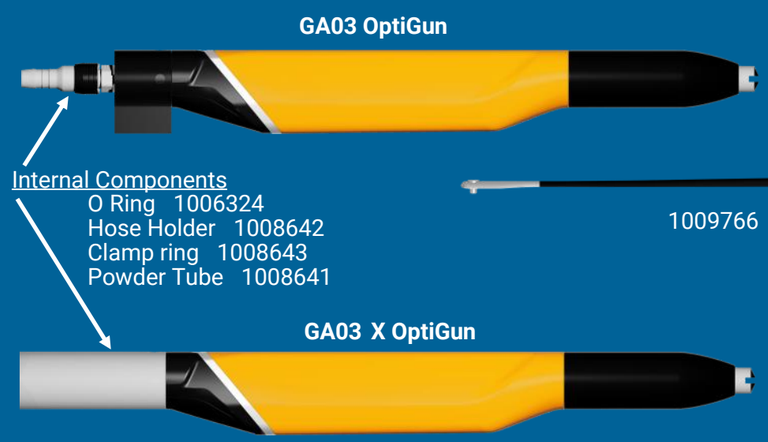

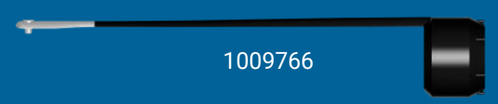

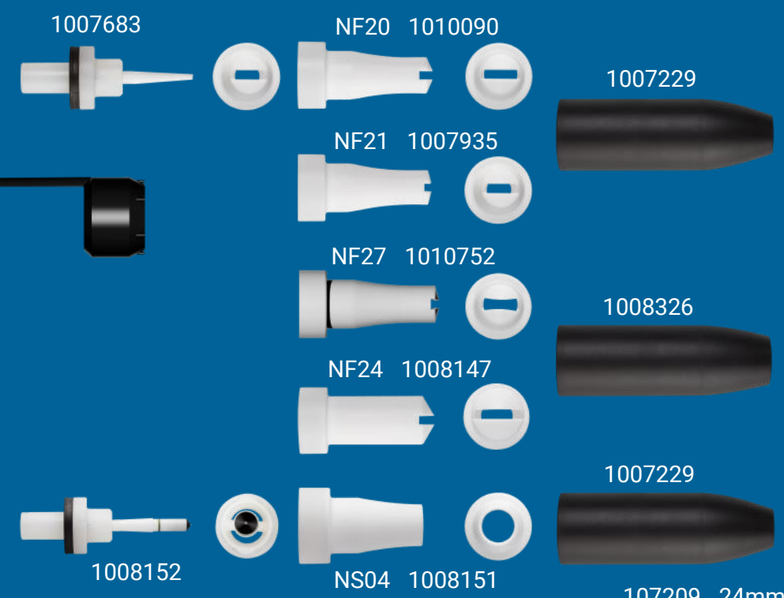

Nozzle Kit (Complete)
NF20 1010160
NF21 1007932
NF24 1008142
NF27 1010754
NS04 1008150

Not Shown
1015832 Filter Element
1000532 O Ring

Powder Hose
(Not Shown)
11/16mm 135533

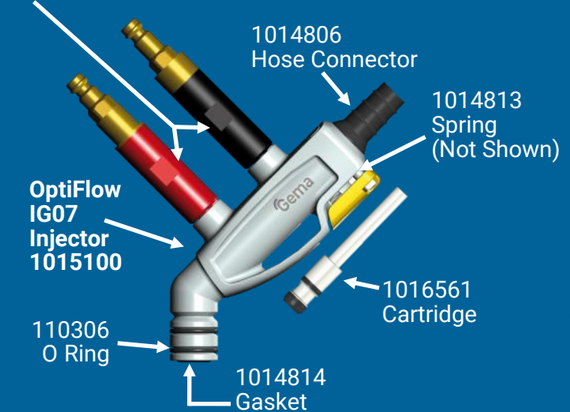

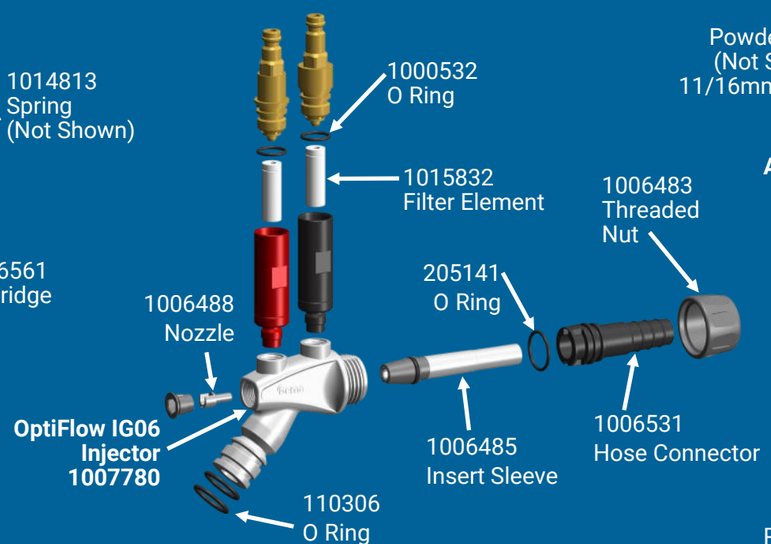

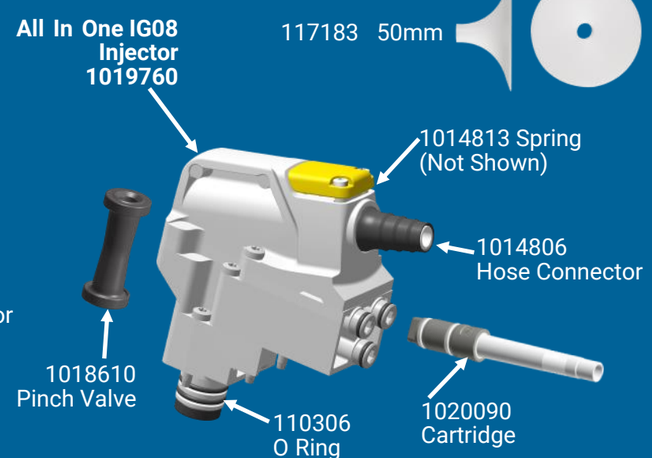

Gema Official Distributor

© 2023 Gema
Gema and OptiFlex are registered trademarks of Gema.

Form Revision: E 100423

OptiGun GA03 Replacement Parts Order Form

Part No	Description
107208	DEFLECTOR,GUN,32MM
107209	DEFLECTOR,GUN,24MM
107210	DEFLECTOR,GUN,16MM
110306	O-RING,16.000ID,2.000W,MET,BUN
117183	DEFLECTOR,GUN,50MM
117184	DEFLECTOR,GUN,70MM
135533	HOSE,POWDER,POE,11/16MM,60MLG
205141	O-RING,16MM X 1.5MM
1000532	O-RING,11MMODX9.5MMID,1.5,BUNA
1006324	O-RING,12MMOD X 1.0MM,FPM75
1006483	NUT,THREADED,OPTIFLOW,IG06
1006485	INSERT,SLEEVE,TEFLON,IG06
1006488	NOZZLE,INJECTOR,OPTIFLOW,IG06
1006531	HOSE CONN FTG,OPTIFLOW,IG06
1007229	SLEEVE,THREADED,NF20/21,GM03
1007683	ELECTRODE HOLDER,FS,GM03
1007780	PUMP ASSY,GUN,OPTIFLOW,IG06
1007932	NOZZLE ASSY,FSD,SMALL,NF21
1007935	NOZZLE,FSD,SMALL,NF21
1008142	NOZZLE ASSY,FSD,24MMOD,NF24
1008145	NOZZLE,FSD,OVAL SLOT,NF22

Part No	Description
1008147	NOZZLE,FSD,24MMOD,NF24
1008150	NOZZLE ASSY,RJ,NS04
1008151	NOZZLE,ROUND JET,NS04
1008152	ELECTRODE HOLDER,RJ,GM03
1008326	SLEEVE,THREADED,NF24,GM03
1008641	TUBE,POWDER,GA03
1008642	CONNECTOR,HOSE,GA03
1008643	CONNECTOR,SLIDE,TUBE,GA03
1009766	SUPERCORONA KIT,GA03,291MM LG
1010090	NOZZLE,FSD,15MM,STANDARD,NF20
1010160	NOZZLE ASSY,FSD,STANDARD,NF20
1010752	NOZZLE,FSD,15MM,STANDARD,NF27
1010754	NOZZLE ASSY,FSD,STANDARD,NF27
1014806	HOSE CONN FTG,OPTIFLOW,IG07
1014813	SPRING,SLIDE GATE RELEASE,IG07
1014814	GASKET,AXIAL,IG07
1015100	PUMP ASSY,GUN,OPTIFLOW,IG07
1015832	FILTER,ELEMENT,IG07
1016561	INSERT,CARTRIDGE,IG07
1018610	SLEEVE,PINCH VALVE,IG08,CG22
1020090	INSERT,CARTRIDGE,IG08,COMPLETE

Springer Industrial
3164 N Colorado St
Chandler, AZ 85225
Phone: 480-898-3144
Fax: 480-898-3192
Orders@springerind.com

Gema Official Distributor

Ship To Location:

Company: _____

Address: _____

_____

_____

Contact: _____

Email: _____

Phone: _____

PO #: _____

QTY	PART NUMBER

Gema Official Distributor

© 2023 Gema
Gema reserves the right to make pricing changes without prior notice. ***All prices valid from 10.30.23***
Gema and OptiFlex are registered trademarks of Gema.

Form Revision: E-100423